Omega B

Colin DeChambeau, Jordan Johnson, Jett Pacheco

Part 1:

Our goal was to create a circuit that takes four inputs, and outputs high when at least three out of the four switches are high. We represented this with our KMAP and logic expression as shown below.

KMAP

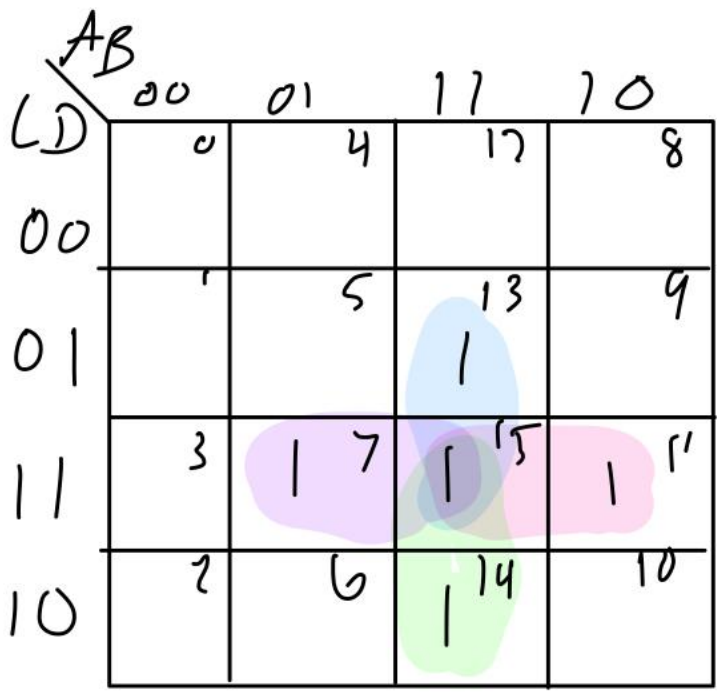

Expression with Hazard

F = ABD + BCD + ACD + ABC

Static 1 Hazards. Hazards occur where C or D is changing.

Logic Gate Diagram

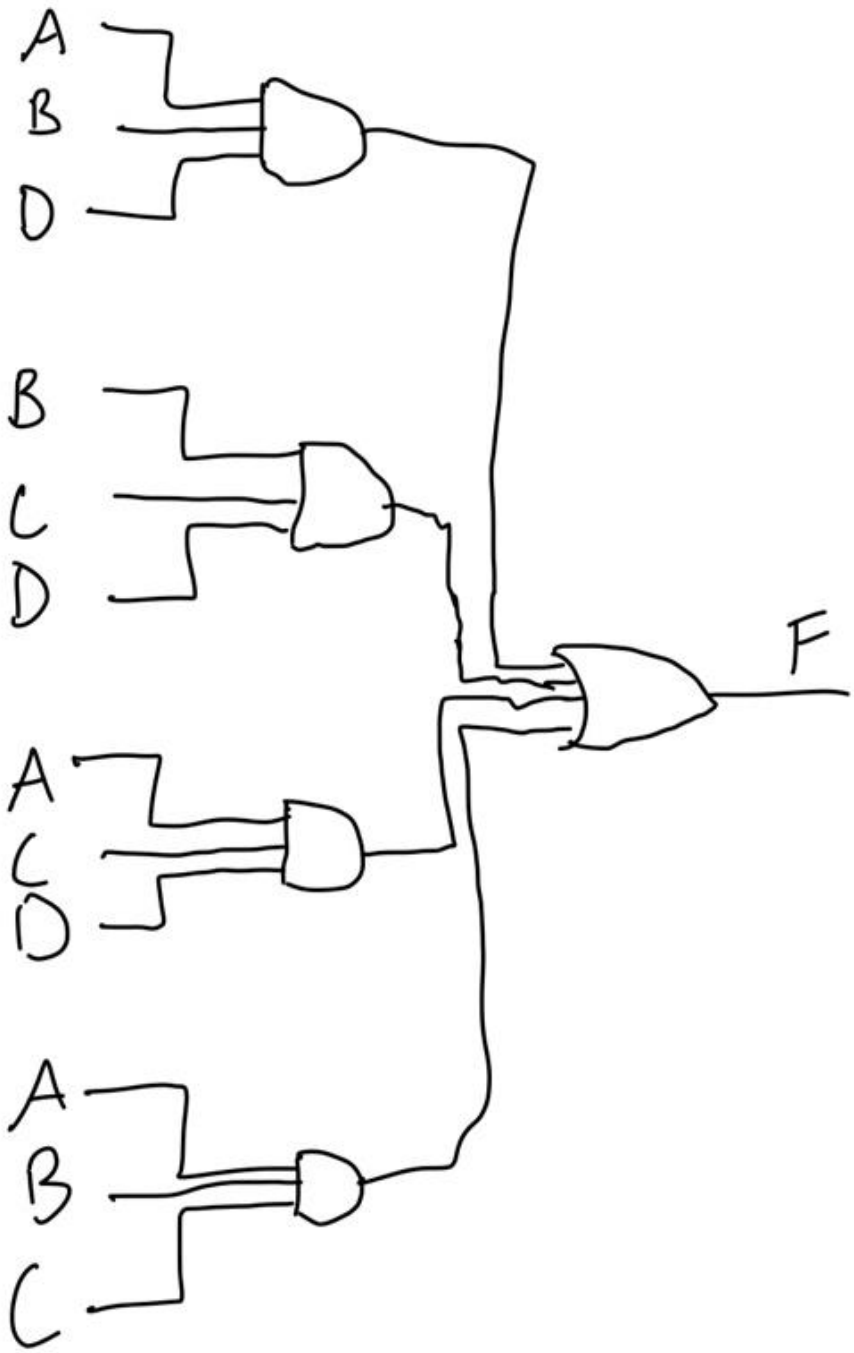
A
B
D
B
C
D
A
C
D
A
B
C
F

Part 2:

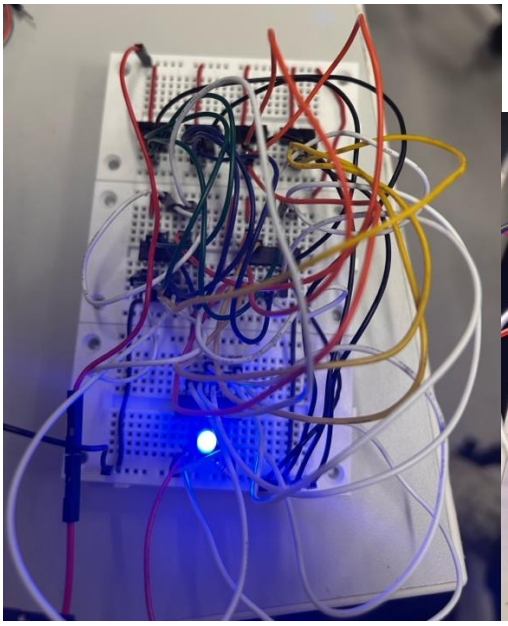

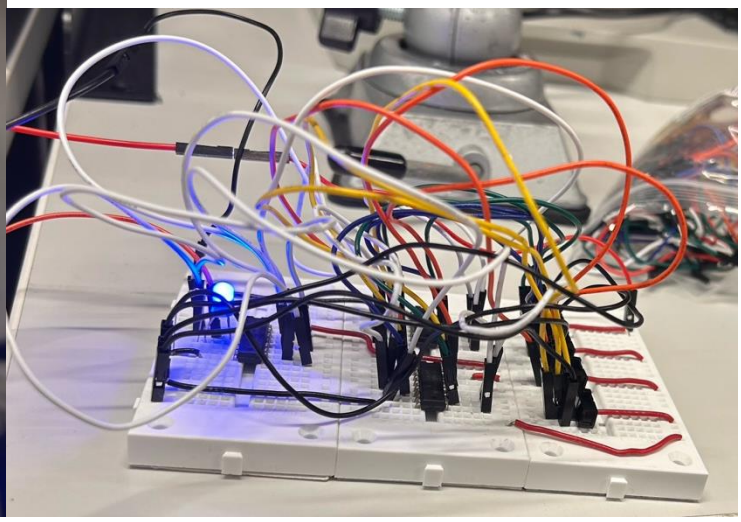

Our design consists of two 74HC08 chips along with one 74HC32 chip. The HC08s are Quad 2 input ANDs. The HC32 is a Quad 2 input OR.

We opted to use the chips provided in our Intro to ECSE parts kits. Originally, we would have used two 74LS11 (Triple 3 input AND gate) as well as one 74LS32 (Quad 2 input OR gate) as provided in the lab. However, the chips we chose instead are functionally the same. For the AND gates we chained the outputs together to create multiple 3 input AND gates from the 2 input chips. The HC OR gate is the same logically as the LS OR gate. The only difference between HC and LS according to the datasheet is the supply voltage. Data sheet information is provided below:

LS:

DM74LS32

Absolute Maximum Ratings (Note 1)

Supply Voltage	7V
Input Voltage	7V
Operating Free Air Temperature Range	0°C to +70°C
Storage Temperature Range	−65°C to +150°C

Note 1: The "Absolute Maximum Ratings" are those values beyond which the safety of the device cannot be guaranteed. The device should not be operated at these limits. The parametric values defined in the Electrical Characteristics tables are not guaranteed at the absolute maximum ratings. The "Recommended Operating Conditions" table will define the conditions for actual device operation.

Recommended Operating Conditions

Symbol	Parameter	Min	Nom	Max	Units
V_{CC}	Supply Voltage	4.75	5	5.25	V
V_{IH}	HIGH Level Input Voltage	2			V
V_{IL}	LOW Level Input Voltage			0.8	V
I_{OH}	HIGH Level Output Current			−0.4	mA
I_{OL}	LOW Level Output Current			8	mA
T_A	Free Air Operating Temperature	0		70	°C

HC:

6 Specifications

6.1 Absolute Maximum Ratings

over operating free-air temperature range (unless otherwise noted)[1]

			MIN	MAX	UNIT
V_{CC}	Supply voltage		−0.5	7	V
I_{IK}	Input clamp current[2]	$V_I < 0$ or $V_I > V_{CC}$		±20	mA
I_{OK}	Output clamp current[2]	$V_O < 0$ or $V_O > V_{CC}$		±20	mA
I_O	Continuous output current	$V_O = 0$ to V_{CC}		±25	mA
	Continuous current through V_{CC} or GND			±50	mA
T_J	Junction temperature[3]			150	°C
T_{stg}	Storage temperature		−65	150	°C

Part 3:

The 74HC08 and the 74HC32 have a propagation delay of 14ns.

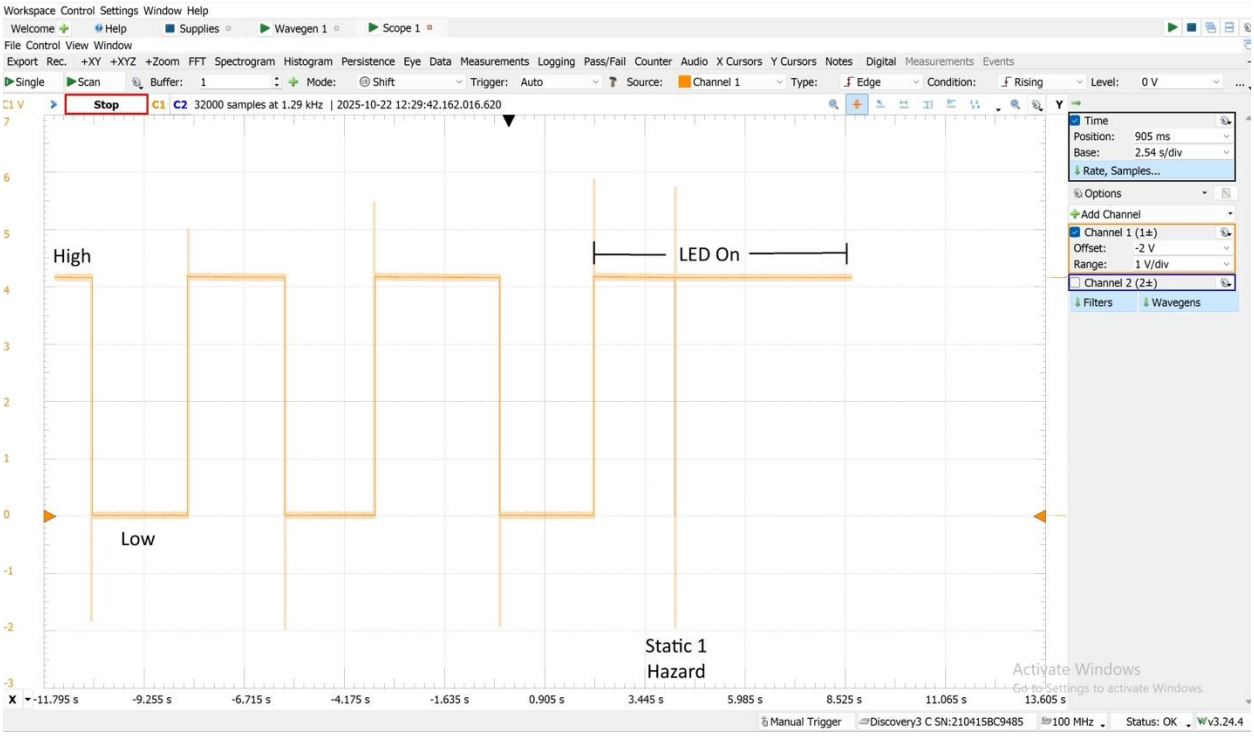

The hazard occurs when A and B are on while C and D are switched on at the same time.

Part 4:

Circuit diagram for modified circuit

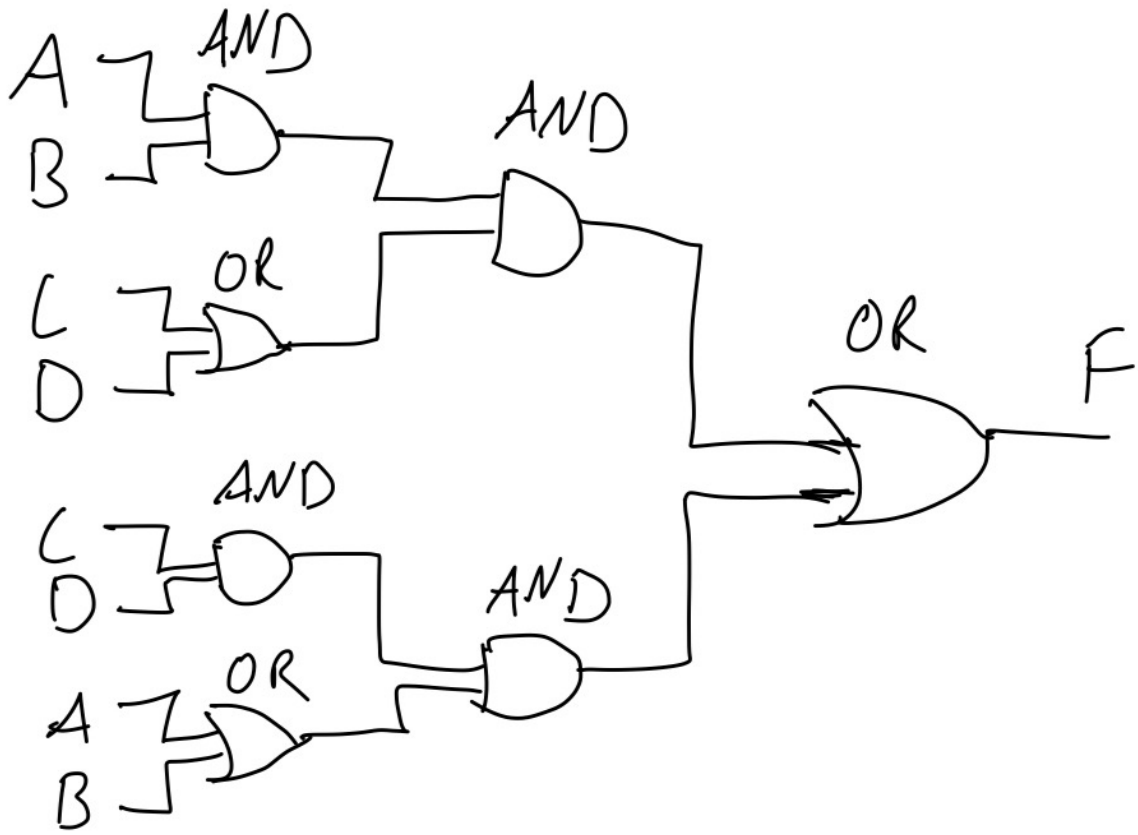

Expression without Hazard

F = AB(C+D) + CD(A+B)

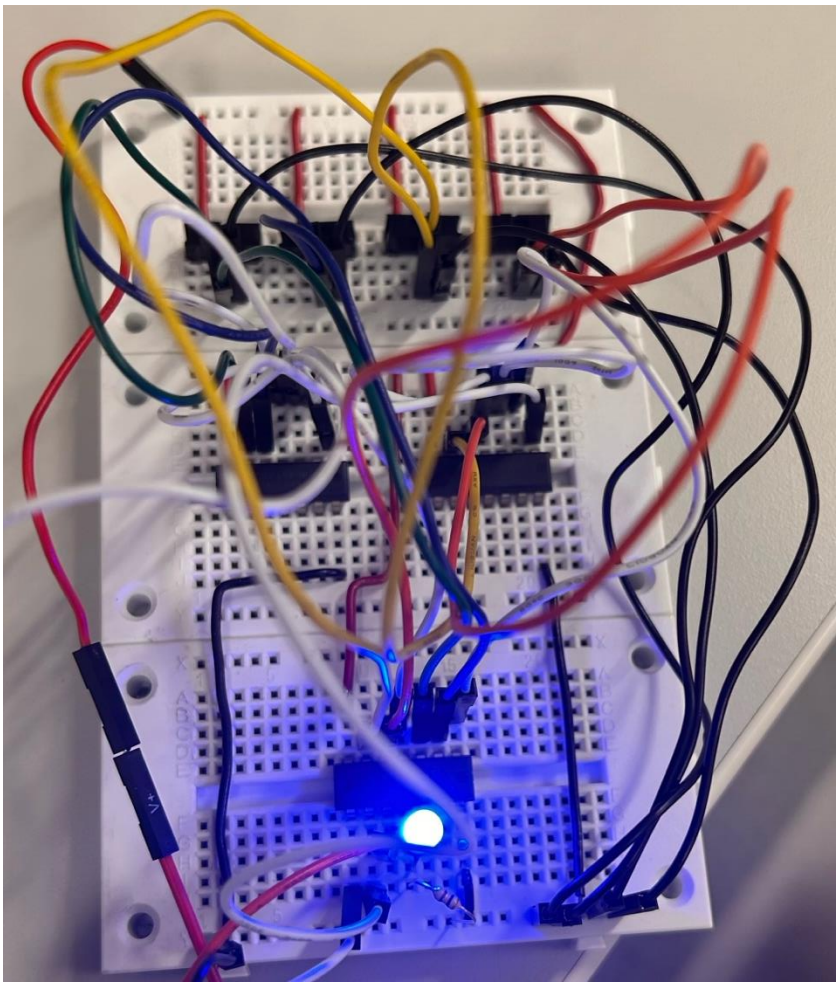

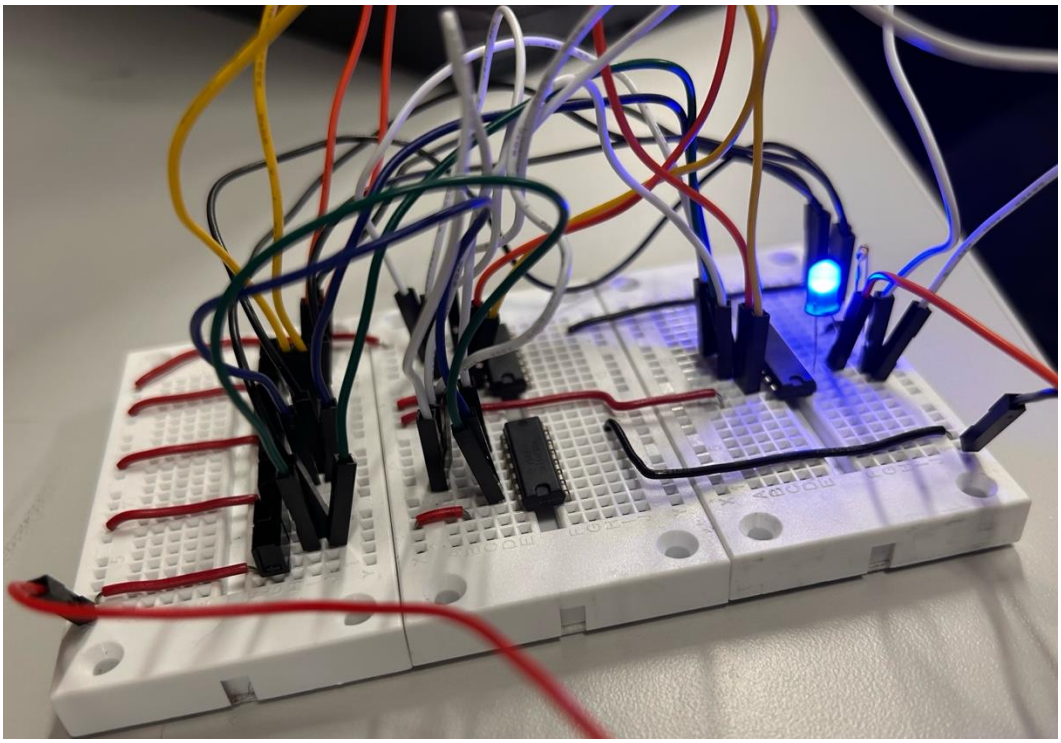

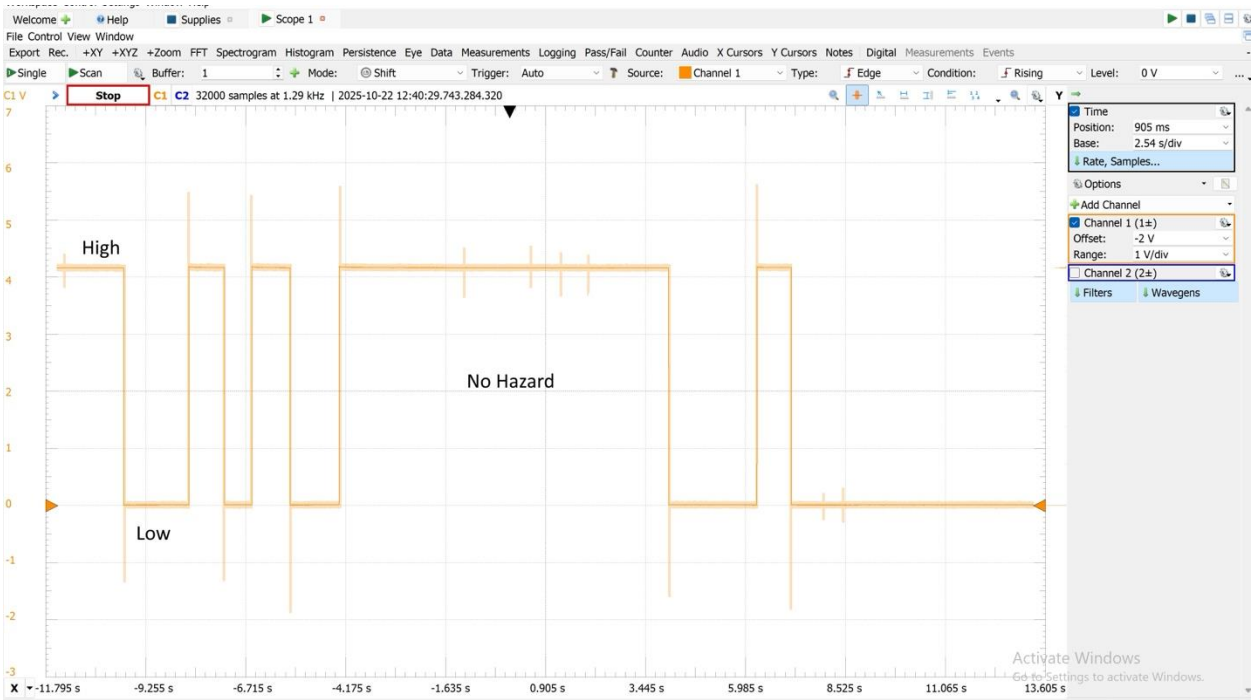

When switches C and D are turned on at the same time, no hazard occurs.

Part 5:

We all worked together coming up with the logic statement, diagrams, and instrumentation. Jett did the wiring. Jordan and Colin worked on the writeup. We all worked together on the rest of the lab.

Part 6:

Clean ☺